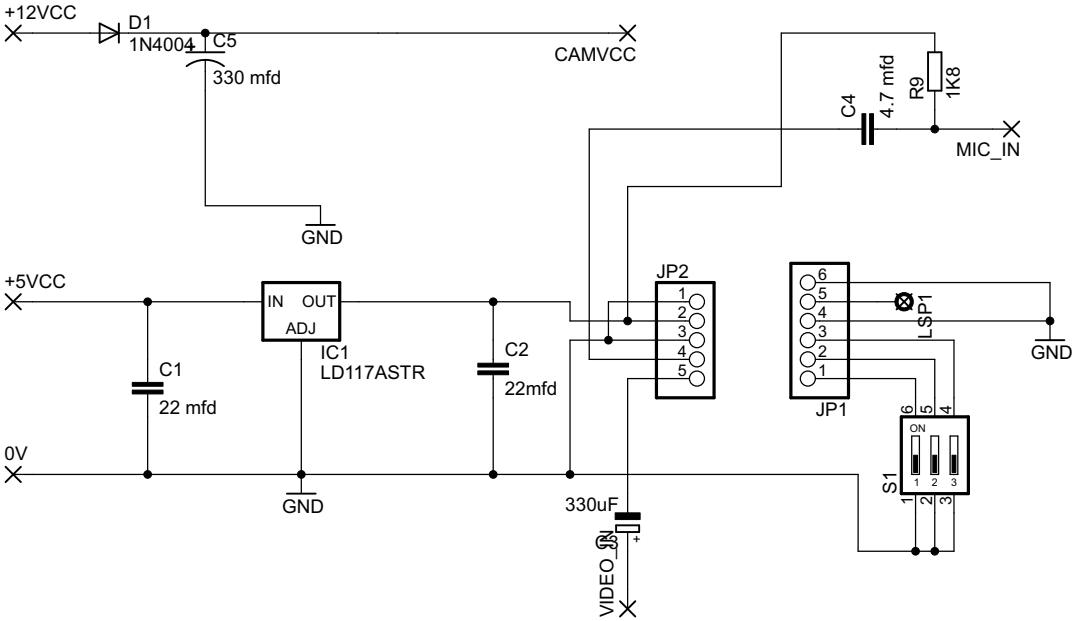
+12VCC
D1
1N4004
C5
330 mfd
CAMVCC
C4
4.7 mfd
R9
1K8
MIC_IN
GND
+5VCC
IN
OUT
ADJ
IC1
LD117ASTR
C1
22 mfd
C2
22mfd
JP2
JP1
LSP1
GND
0V
GND
330uF
VIDEO_IN
S1
ON