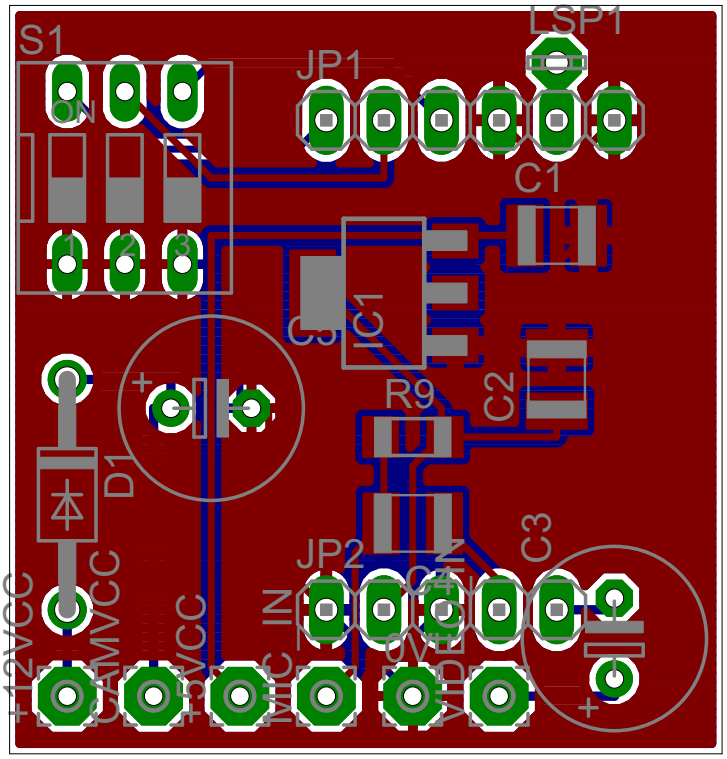
S1
ON
JP1
LSP1
C1
IC1
R9
C2
D1
JP2
C3
IN
+12VCC
CAMVCC
+5VCC
MIC
0V
VIDEO
IN